LUNA DIAMOND 850 V
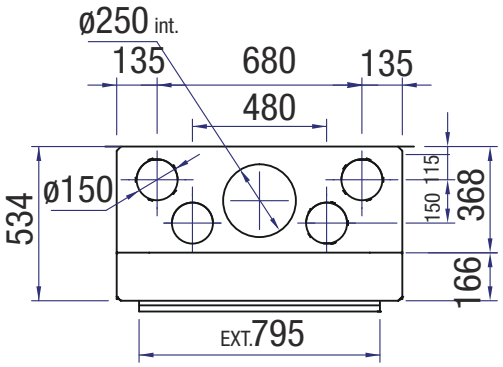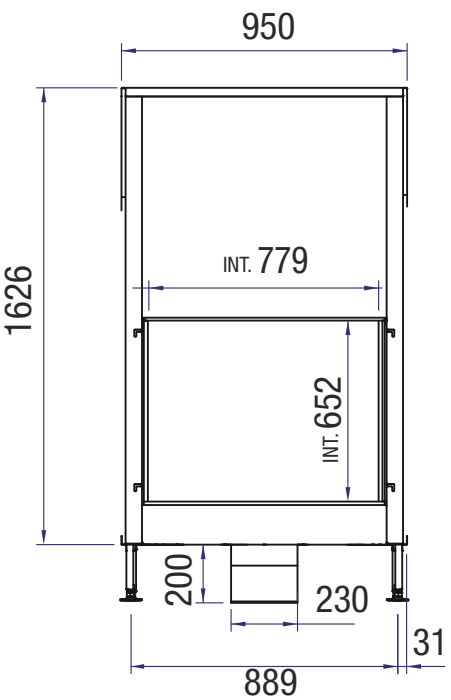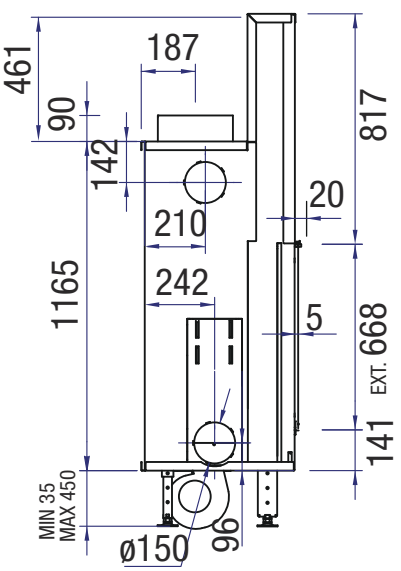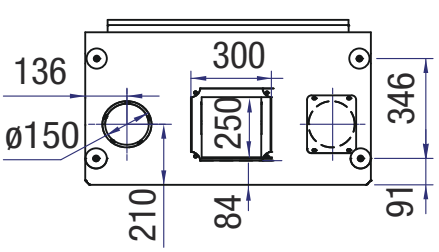
PASSION FOR FIRE